Electronics Documentation

1. Electronics Block Diagram

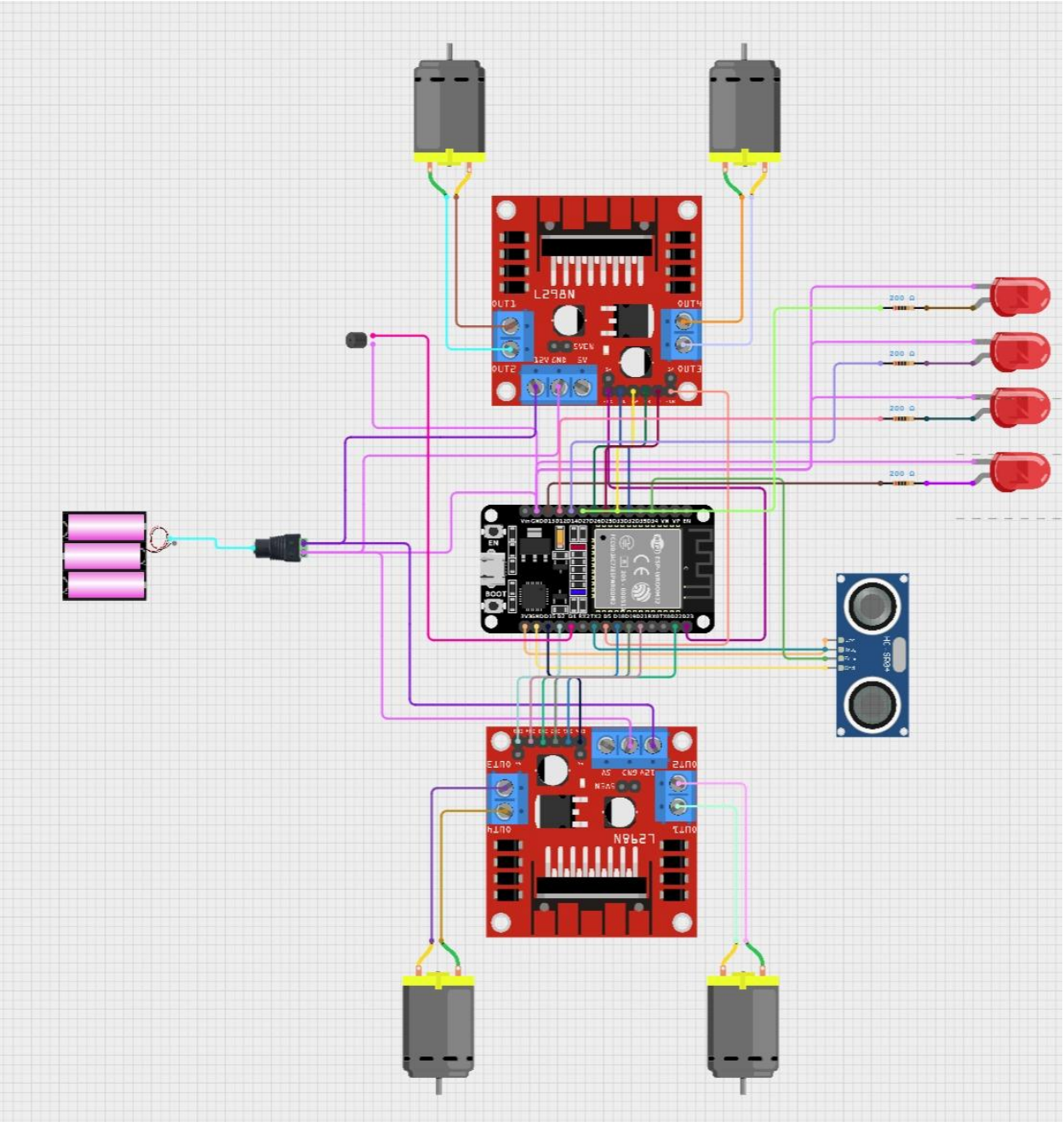

2. Components Table

Component	Quantity	Purpose	Justification
1. LEDs	*4*	*Acts as the indicator for the car*	*Easy to code and create patterns to signal left and right*
2. Ultrasound sensor	*1*	*To detect the presence of an obstacle in front*	*Gives more accurate result than capacitive touch and can be used to calculate stopping distance.*
3. Buzzer	*1*	*To indicate presence of an obstacle*	*Acts as an alarm to prevent car crash.*
4. DC geared motors	*4*	*To move the wheels forward, back, turn left and right*	*Smoother movements and precise speed control.*
5. ESP32	*1*	*Wifi Control*	*Microprocessor to bring all the components together*
6. Resistors	*4*	*To complete the circuiting for LEDs*	*Controls the voltage and current input for LEDs*
7. Battery (LiPo)	*1*	*Power supply*	*Compact and produces enough voltage to run the car*
8. Motor driver module	*2*	*Direction control*	*Needs more power than just ESP32 and helps control motion*
9. Breadboard	*1*	*Connections*	*Convenient to keep all the components connected*
10. Copper wires	*As required*	*Connections*	*Convenient to keep all the components connected*

11. DC jack (female)	*1*	*Connection*	*To connect the circuit to the power supply*